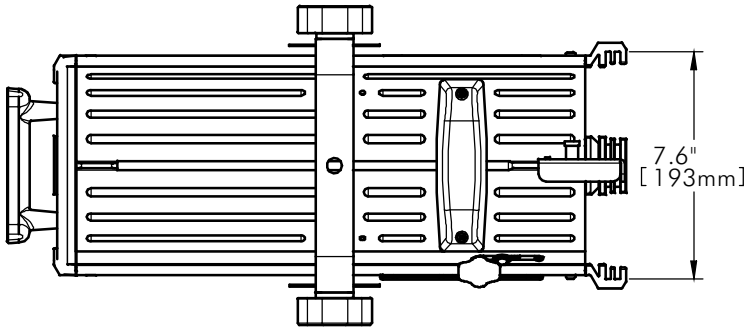
7.6"
[193mm]

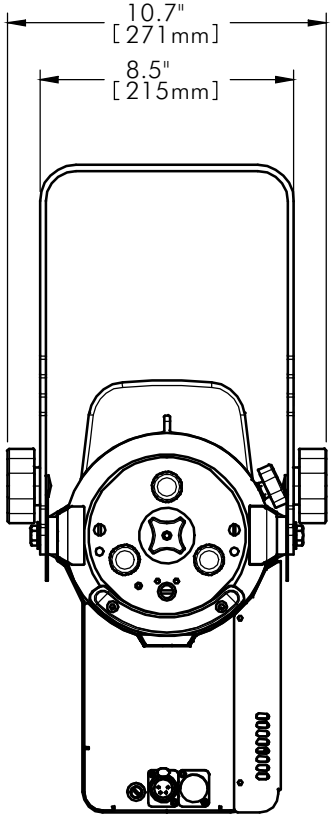
10.7"
[271mm]
8.5"
[215mm]

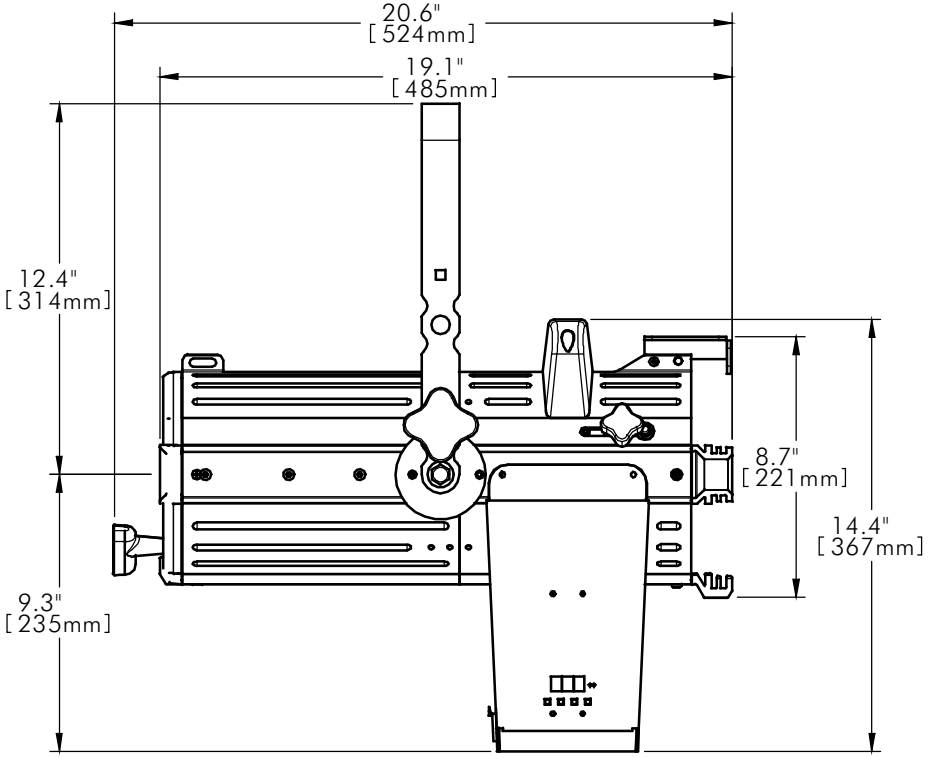
20.6"
[524mm]
19.1"
[485mm]
12.4"
[314mm]
8.7"
[221mm]
14.4"
[367mm]
9.3"
[235mm]