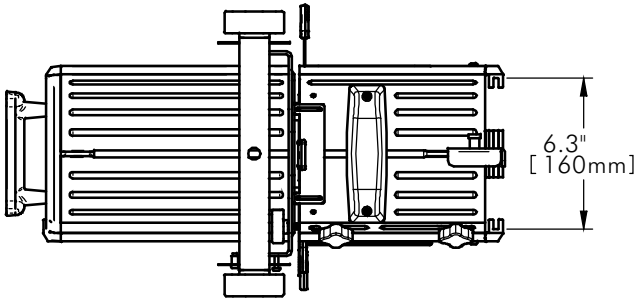
6.3"
[160mm]

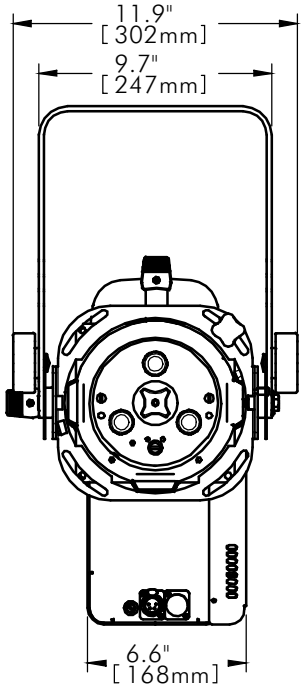
11.9"
[302mm]
9.7"
[247mm]
6.6"
[168mm]

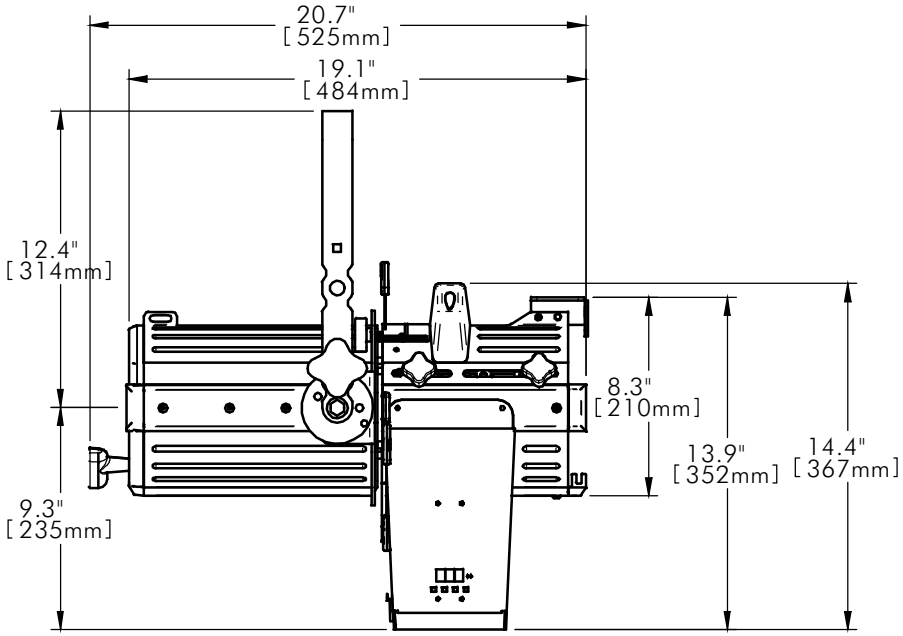
20.7"
[525mm]
19.1"
[484mm]
12.4"
[314mm]
9.3"
[235mm]
8.3"
[210mm]
13.9"
[352mm]
14.4"
[367mm]